Galvanised Specialists Ltd | Lodgefield Road | Halesowen | West Midlands, B62 8AR
Tel. 0121 601 0480 | Email sales@wireropeshop.co.uk

22mm Electro Galvanised Bow Shackle



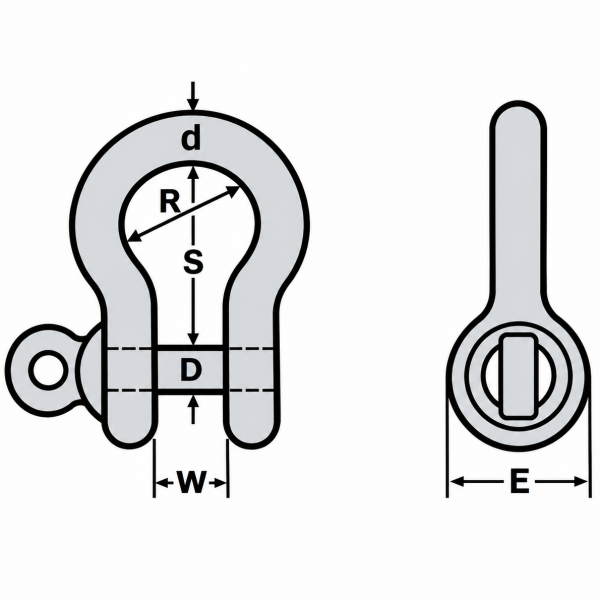

Product	22mm Galvanised Bow Shackle
d (mm)	22
D (mm)	22
E (mm)	44
R (mm)	76
W (mm)	44
S (mm)	88

Note - Product sizes are liable to change from time to time, if your dimension requirements are critical, please contact us.