Galvanised Specialists Ltd | Lodgefield Road | Halesowen | West Midlands, B62 8AR
Tel. 0121 601 0480 | Email sales@wireropeshop.co.uk

25mm Electro Galvanised Bow Shackle



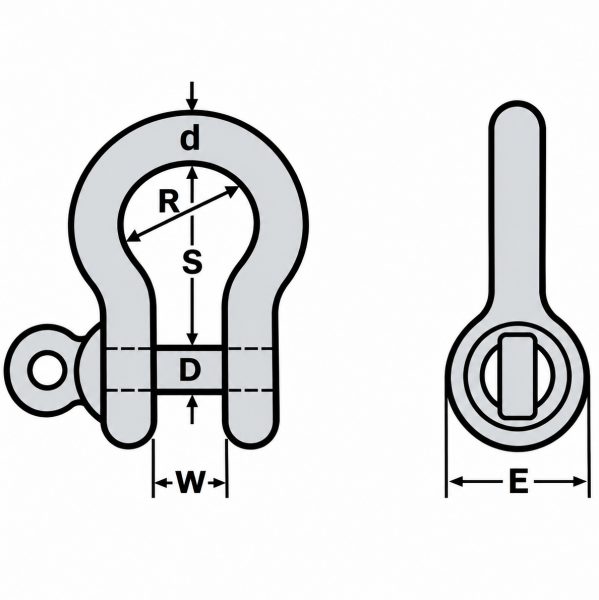

Product	25mm Galvanised Bow Shackle
d (mm)	25
D (mm)	25
E (mm)	50
R (mm)	84
W (mm)	48
S (mm)	96

Note - Product sizes are liable to change from time to time, if your dimension requirements are critical, please contact us.